USN | | | | | | | | | | [22AS53]

FIFTH SEMESTER B.Tech EXAMINATION, DECEMBER-2024

AEROSPACE STRUCTURES

Time: 3 Hours **Maximum Marks: 100**

Instructions: i. Missing data may be suitably assumed.

ANSWER ALL QUESTIONS

		PART-A	**5 x2=10**		
1.	**a.**	List the desired material properties of an airframe.	L1	CO1	**02**
	b.	Define a bar and a beam.	L1	CO1	**02**
	c.	Define a truss and a frame.	L1	CO1	**02**
	d.	Define a column and a girder.	L1	CO1	**02**
	e.	What are monococque and semi-monococque structures.	L1	CO1	**02**
		PART-B	**6 X 5=30**		
2.	**a.**	Define strain energy density, resilience, proof resilience, modulus of resilience, modulus of toughness.	L1	CO1	**05**
		OR			
	b.	Obtain the continuity or equilibrium equations for a 3d infinitesimal cubic element.	L2	CO1	**05**
3.	**a.**	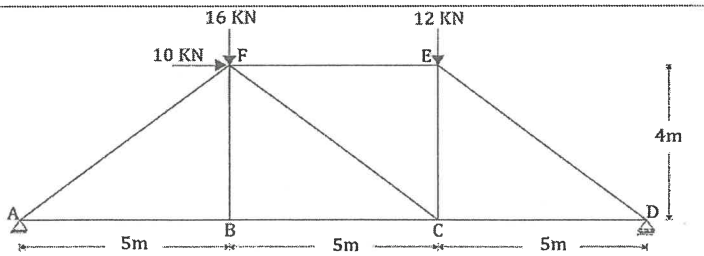 Find the member forces in the truss shown by method of joints or method of sections.	L1	CO1	**05**
		OR			
	b.	Obtain an expression for strain energy stored in a body due to bending.	L2	CO1	**05**
4.	**a.**	Determine the axial force, shear and bending moment for the frame shown in the figure. 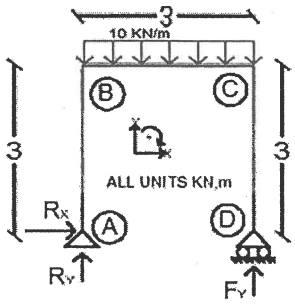	L3	CO1	**05**

Deemed-to-be University Learning Resource Centre Jain Global Campus Ramanagar-562

		OR			
	b.	A beam having the cross section shown in figure is subjected to a bending moment of 1500Nm in a vertical plane. Calculate the maximum direct stress due to bending stating the point at which it acts. 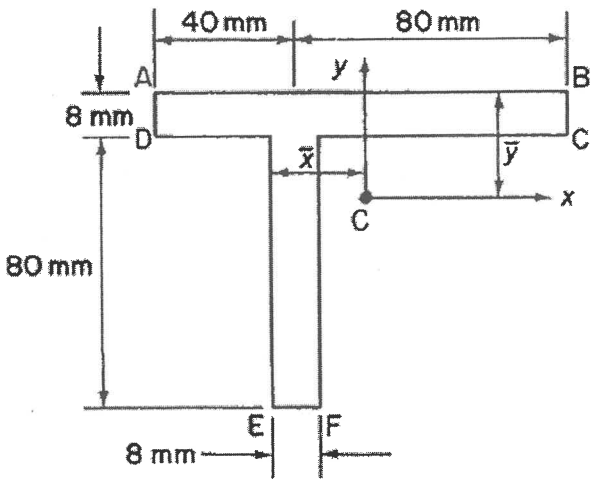	L3	CO2	**05**
5.	**a.**	Obtain the shear centre for the channel section shown in the figure. Where b=25 mm, h=50 mm and thickness t=2 mm. 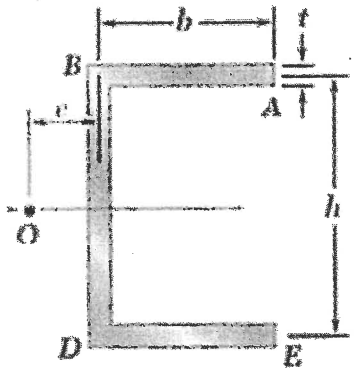	L3	CO2	**05**
		OR			
	b.	Obtain the shear flow and twist per unit length of the two cell tube made of Aluminium (E = 70GPa) as shown in the figure. and subjected to a Torque 90000 N-cm. 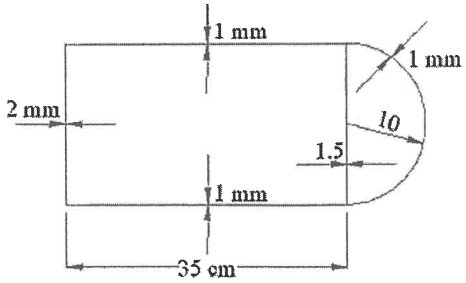	L3	CO5	**05**

6.	**a.**	Refer to the figure of a single cell cross section of beam and plot the shear flow pattern for S_y = 100lb acting as shown. 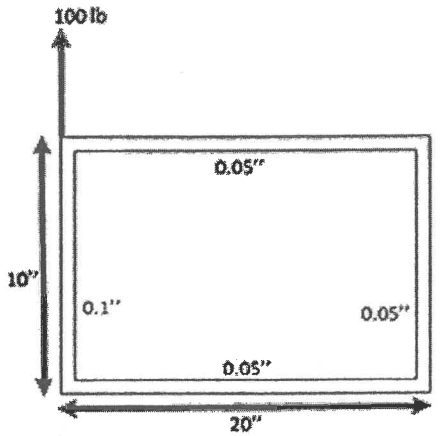	L3	CO2	**05**
		OR			
	b.	Explain the concept of structural idealization and obtain an expression for boom areas for a thin walled section.	L2	CO4	**05**
7.	**a.**	Explain the concept of shear lag.	L2	CO5	**05**
		OR			
	b.	Determine the rate of twist and warping distribution in the following symmetrical, rectangular section when subjected by counterclockwise torque T. Assume G is constant. 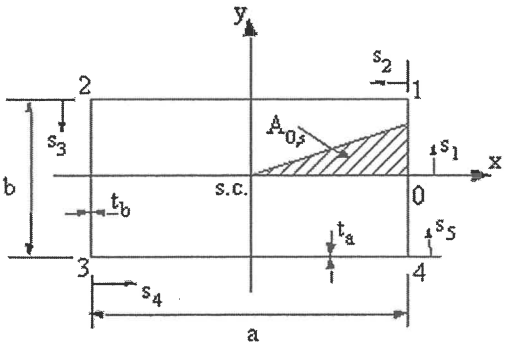	L3	CO5	**05**
		PART-C **6 X 10=60**			
8.	**a.**	Determine the direct stress distribution due to bending about axes having no symmetry. 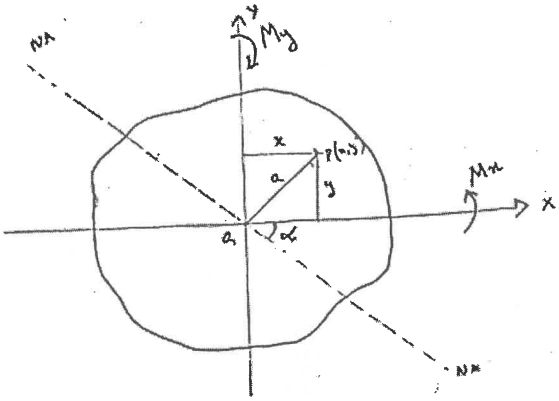	L2	CO2	**10**
		OR			

	b.	The Part of a wing section is in the form of the two-cell box shown in figure in which the vertical spars are connected to the wing skin through angle sections all having a cross-sectional area of $300mm^2$. Idealize the section into an arrangement of direct stress carrying booms and shear stress only carrying panels suitable for resisting bending moments in a vertical plane. Position the booms at the spar/skin junctions. 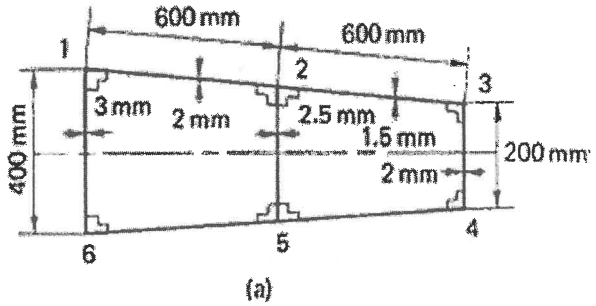 (a)	L3	CO4	**10**
9.	**a.**	For an idealized single cell box, Obtain the shear centre. Boom areas $B1=B4=4000mm^2$, $B2=B3=3540mm^2$. $t_{12}=t_{14}=t_{43}=10mm$, $t_{23}=8mm$. 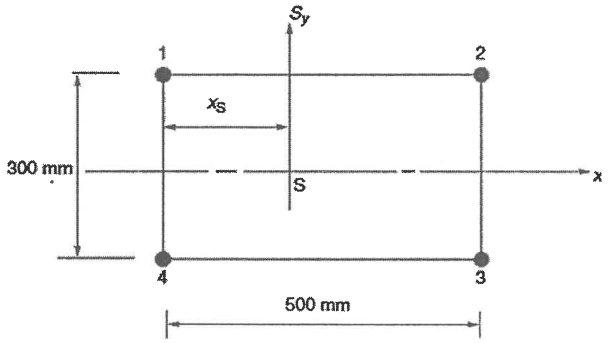	L3	CO4	**10**
		OR			
	b.	The fuselage of a light passenger-carrying aircraft has the circular cross section shown in figure. The cross-sectional area of each stringer is $100mm^2$, and the vertical distances given in figure (a) are to the midline of the section wall at the corresponding stringer position. If the fuselage is subjected to a bending moment of 200kNm applied in the vertical plane of symmetry, at this section, calculate the direct stress distribution. 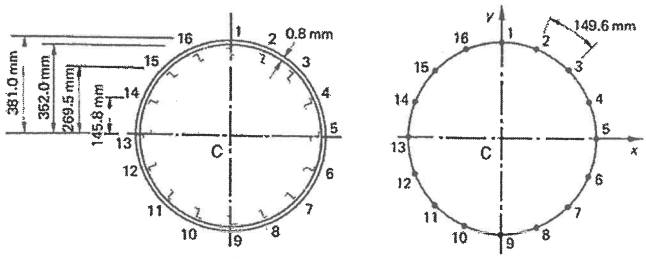 (a) (b)	L3	CO4	**10**

10.	**a.**	For a 3 stringer thin walled beam cross section with non-uniform wall thickness and shear flow being constant as shown in the figure, find the angle of twist, shear stress in the curved wall, lastly maximum torque in the curved wall if the allowable shear stress of the material is 200MPa. 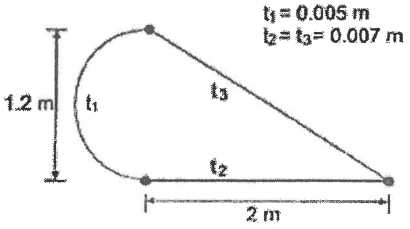	L3	CO4	**10**
		OR			
	b.	The wing section shown in figure has been idealized such that the booms carry all the direct stresses. If the wing section is subjected to a bending moment of 300kNm applied in a vertical plane, calculate the direct stresses in the booms. Boom areas: $B_1 = B_6 = 2580mm^2$, $B_2 = B_5 = 3880mm^2$, $B_3 = B_4 = 3230mm^2$ 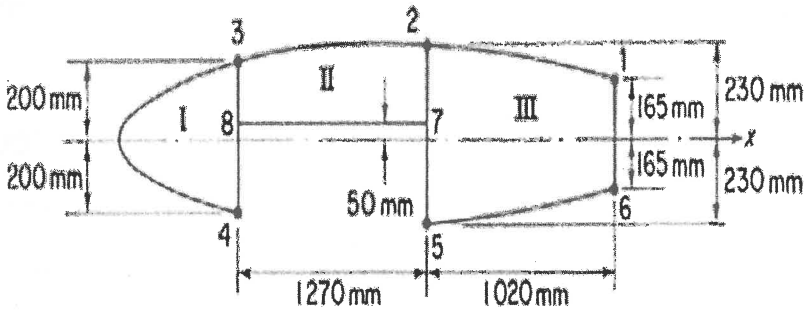	L3	CO4	**10**
11.	**a.**	Calculate the shear stress distribution in the walls of the three-cell wing section shown in figure, when it is subjected to a counterclockwise torque of 11.3kNm. In the table o and i are used to distinguish between inner and outer walls connecting the same two booms. 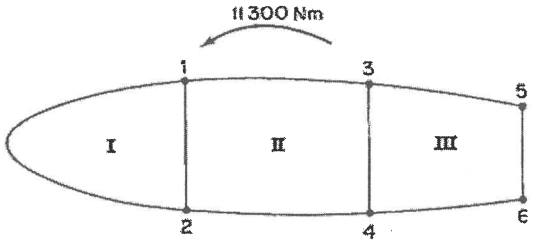	L3	CO4	**10**

Wall	Length (mm)	Thickness (mm)	$G(N/mm^2)$	Cell area (mm^2)
12°	1650	1.22	24 200	$A_I = 258\,000$
12^i	508	2.03	27 600	$A_{II} = 355\,000$
13, 24	775	1.22	24 200	$A_{III} = 161\,000$
34	380	1.63	27 600	
35, 46	508	0.92	20 700	
56	254	0.92	20 700	

		OR			
	b.	Determine the shear flow distribution in the web of the tapered beam shown in figure, at a section midway along its length. The web of the beam has a thickness of 2mm and is fully effective in resisting direct stress. The beam tapers symmetrically about its horizontal centroidal axis, and the cross-sectional area of each flange is 400mm^2. 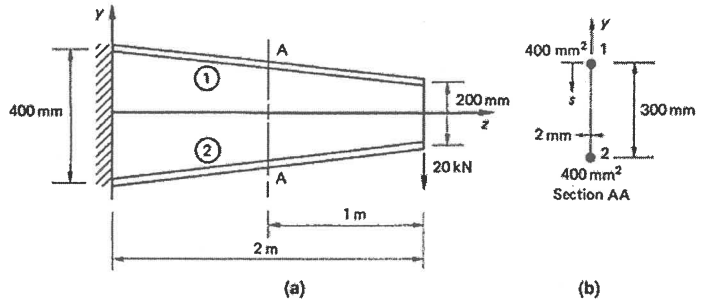	L3	CO4	**10**
12.	**a.**	Obtain the inplane equilibrium equations of a thin plate subjected to bi-axial and shear components.	L3	CO3	**10**
		OR			
	b.	For a simply supported rectangular plate subjected to uniform axially compressive force N_x/unit length along x=0,a, obtain an expression for the buckling load.	L3	CO3	**10**
13.	**a.**	Write a note on micro meteoroid and orbital debris.	L1	CO5	**10**
		OR			
	b.	Explain the multi-faceted approach to mitigate MMOD.	L2	CO5	**10**